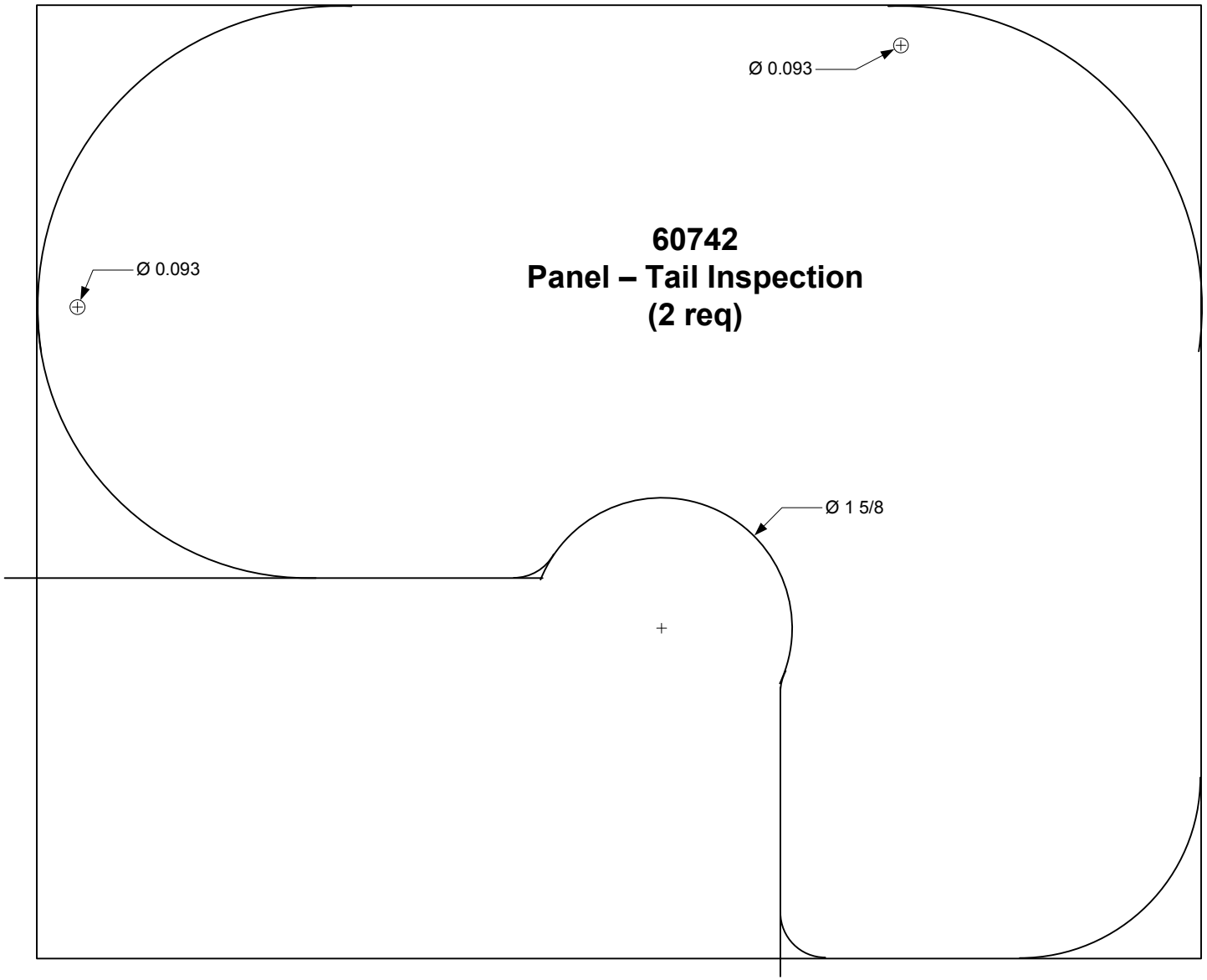

60742
Panel – Tail Inspection
(2 req)

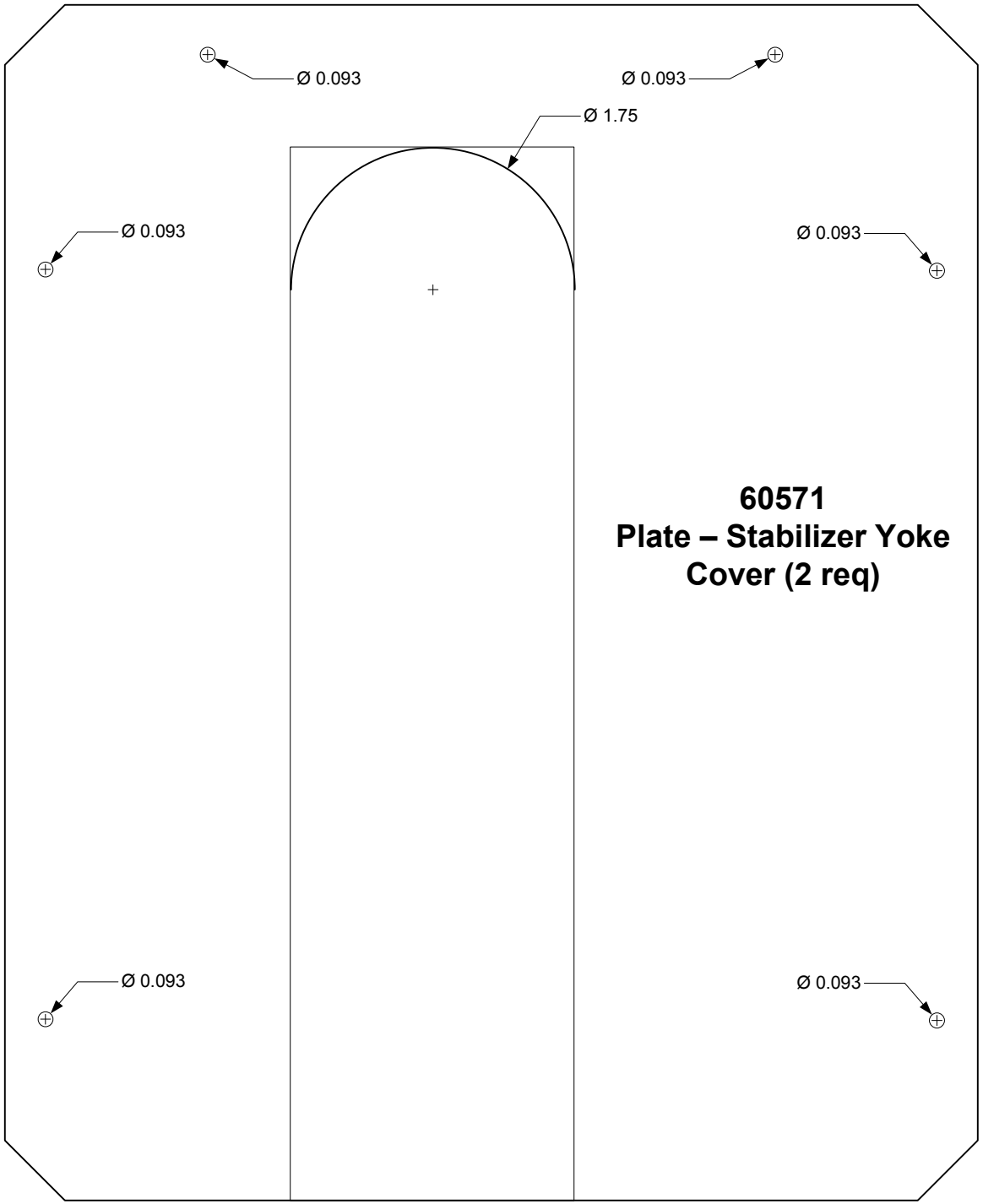

60571
Plate – Stabilizer Yoke Cover (2 req)